CITY OF SANTA CLARA
Inspection Division
1500 Warburton Avenue
Santa Clara, CA 95050
www.santaclaraca.gov

Division Phone: (408) 615-2440
Permit Center: (408) 615-2420
Automated Inspection System: (408) 615-2400
Fax: (408) 241-3823
Email: buildinginspection@santaclaraca.gov

GENERAL REQUIREMENTS FOR TOILET & BATHING FACILITIES

2013 CBC SECTION 11B-213 & DIVISION 6

❖ General (CBC 11B-213)

Where toilet and bathing facilities are provided, **EACH** toilet and bathing room shall be accessible to persons with disabilities (comply with Section 11B-603) and shall be on an accessible route connected to accessible entry.

Exception:

1. Where toilet and bathing facilities are provided in buildings without elevators above and below the first floor permitted by Section 11B-206.2.3 Exception 1, accessible toilet and bathing facilities shall be provided on a story connected by an accessible route to an accessible entrance.
2. In alterations where it is technically infeasible to comply with Section 11B-603, altering toilet or bathing room shall not be required where a single accessible unisex toilet room or bathing room is provided and located in the same area and on the same floor as existing inaccessible toilet or bathing rooms. (CBC 11B-213.2 Exception 1)

Where existing toilet rooms or bathing rooms are not accessible (do not comply with Section 11B-603), directional signs indicating the location of the nearest accessible toilet room or bathing room within the facilities shall be provided (CBC 11B-216.8)

❖ Unisex Facilities

When is a unisex toilet room allowed? (CPC 422.2 Exceptions):

1. In occupancies with a total occupant load of 10 or less, including customers and employees.
2. In business and mercantile occupancies with a total occupant load of 50 or less including customers and employees.

Number of required accessible unisex toilet rooms:

1. Where multiple unisex toilet rooms are clustered at a single location, 50 percent, but no fewer than one, of the unisex toilet rooms at each cluster shall be accessible. (CBC 11B-213.2 Exception 4)
2. Accessible unisex toilet rooms shall be identified by the International Symbol of Accessibility complying with Section 11B-703.7.2.6 (CBC 11B-216.8).
3. Doors to unisex toilet rooms and bathing rooms shall have privacy latches (CBC 11B-213.2.1)

❖ Children's Facilities

1. Water closets and toilet compartments for children's use shall comply with Section 11B-604.9

***SUGGESTED DIMENSIONS* FOR WATER CLOSETS SERVING CHILDREN AGES 3 THROUGH 12**			
	Ages 3 and 4	**Ages 5 through 8**	**Ages 9 through 12**
Water Closet Centerline	12 inches (305 mm)	12 to 15 inches (305 to *381* mm)	15 to 18 inches (*381* to *457* mm)
Toilet Seat Height	11 to 12 inches (*279* to 305 mm)	12 to 15 inches (305 to *381* mm)	15 to 17 inches (*381* to *432* mm)
Grab Bar Height	18 to 20 inches (*457* to *508* mm)	20 to 25 inches (*508* to 635 mm)	25 to 27 inches (635 to *686* mm)
Dispenser Height	14 inches (*356* mm)	14 to 17 inches (*356* to *432* mm)	17 to 19 inches (*432* to *483* mm)

2. Grab bars in water closets for children's use shall be installed in a horizontal position 18" minimum and 27" maximum above the finished floor measured to the top of the gripping surface. (CBC 11B-609)

CITY OF SANTA CLARA
Inspection Division
1500 Warburton Avenue
Santa Clara, CA 95050
www.santaclaraca.gov

Division Phone: (408) 615-2440
Permit Center: (408) 615-2420
Automated Inspection System: (408) 615-2400
Fax: (408) 241-3823
Email: buildinginspection@santaclaraca.gov

GENERAL REQUIREMENTS FOR TOILET & BATHING FACILITIES

2013 CBC SECTION 11B-213 & DIVISION 6

❖ Door Mounted Signage: (CBC 11B-216.8 & 11B-703.7.2.6)

a. Men: A ¼" thick equilateral triangle with edge 12" long and vertex upward.
b. Women: A ¼" thick circle and 12" in diameter.
c. Unisex: A ¼" thick circle and 12" in diameter with a ¼" thick triangle superimpose on the circle

Note:
1. Signage shall contrast with the door, either light on a dark background or dark on a light background
2. Pictograms and/or lettering are not required on door-mounted signage

❖ Wall Signage: (CBC 11B-703.2 to 11B-703.6)

Information: Raised characters, pictorial symbols with Grade 2 Braille for permanent rooms and space of a building

❖SIGN INSTALLATION HEIGHT AND LOCATION (CBC 11B-703.4)

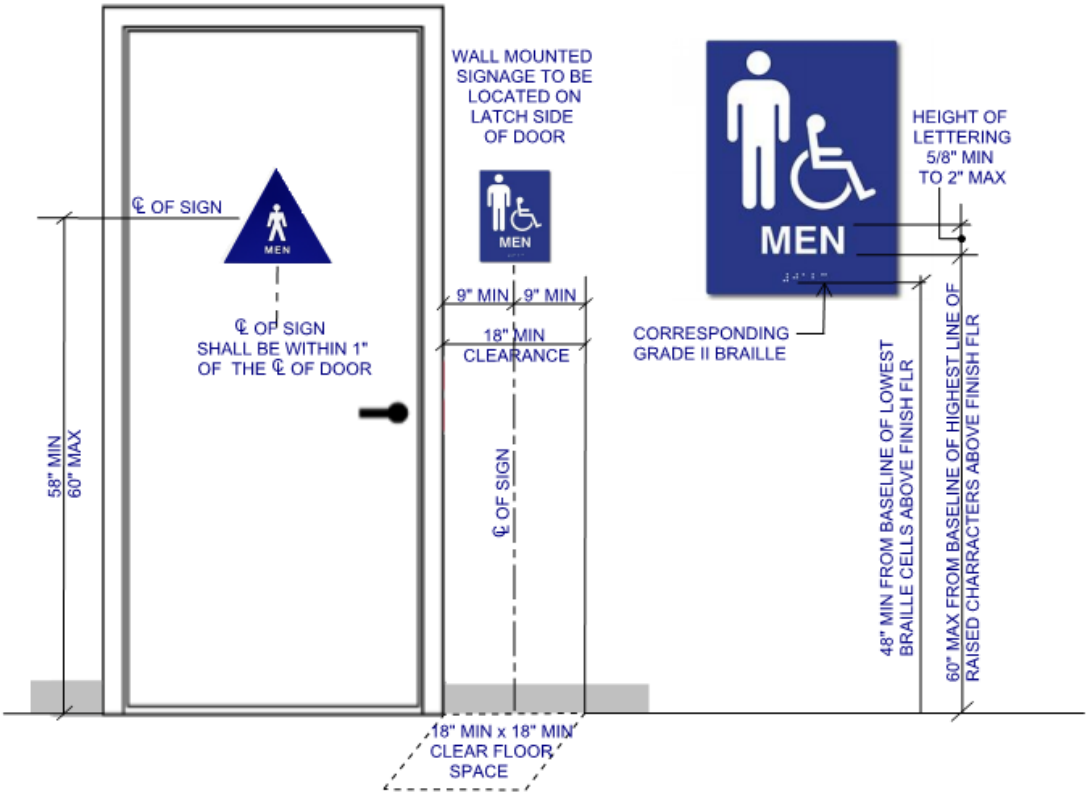

CITY OF SANTA CLARA
Inspection Division
1500 Warburton Avenue
Santa Clara, CA 95050
www.santaclaraca.gov

Division Phone: (408) 615-2440
Permit Center: (408) 615-2420
Automated Inspection System: (408) 615-2400
Fax: (408) 241-3823
Email: buildinginspection@santaclaraca.gov

GENERAL REQUIREMENTS FOR TOILET & BATHING FACILITIES

2013 CBC SECTION 11B-213 & DIVISION 6

❖ Accessible Features:

1. *Water Closets (CBC 11B-604):*

- Location: 17” – 18” from side wall at wheel chair accessible toilet
  18” – 19” from side wall in the ambulatory accessible toilet
- Seat Height: 17” – 19”
- Flush Controls: hand operated or automatic, located on open side.
- Control Height: Max. 44” above floor
- Minimum Clear Space around Water Closet: 60” x 56”
- Maneuvering Space in front of Water Closet: 60” wide x 48” deep

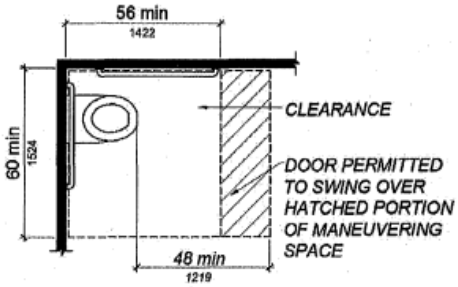

FIGURE *11B*-604.3.1
SIZE OF CLEARANCE AT WATER CLOSETS

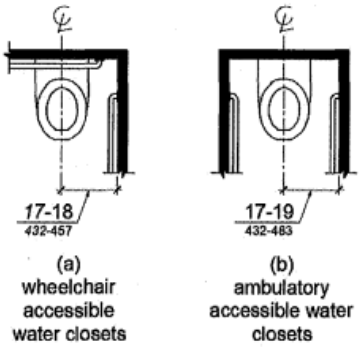

FIGURE *11B*-604.2
WATER CLOSET LOCATION

2. *Grab bars: (CBC 11B-604.5 & 11B-609)*

- Circular section: 1 ¼” – 2” outside diameter
- Non-circular section: Cross section dimension of 2” max and
  Perimeter dimension of 4” - 4.8”
- Spacing between Wall and Grab bar: 1 ½”.
- Height: 33” – 36” above finish floor <u>measured to the top of bar</u>
- Side Bar: 42” min. long with 24” in front of water closet. Located
  12” max from rear wall & extend 54” from rear wall
- Back Bar: 36” min. long. Extend from centerline of the water closet
  12” min on one side and 24” min on the other side
- L-shaped grab bar meeting dimensional requirements of side and Grab bars shall be permitted
- Strength: Minimum 250 lbs.

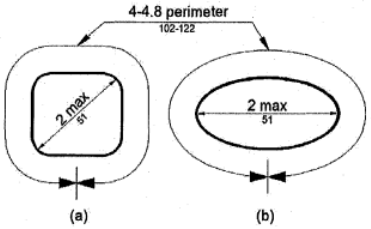

FIGURE *11B*-609.2.2
GRAB BAR NON-CIRCULAR CROSS SECTION

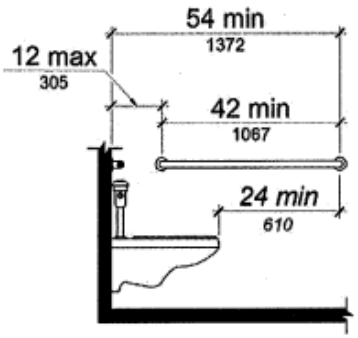

FIGURE *11B*-604.5.1
SIDE WALL GRAB BAR AT WATER CLOSETS

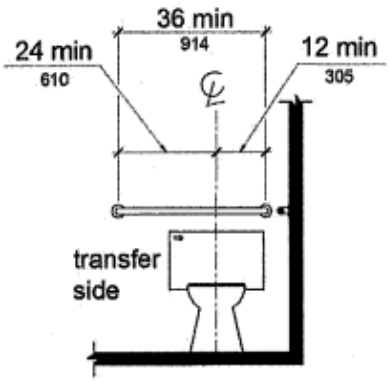

FIGURE *11B*-604.5.2
REAR WALL GRAB BAR AT WATER CLOSETS

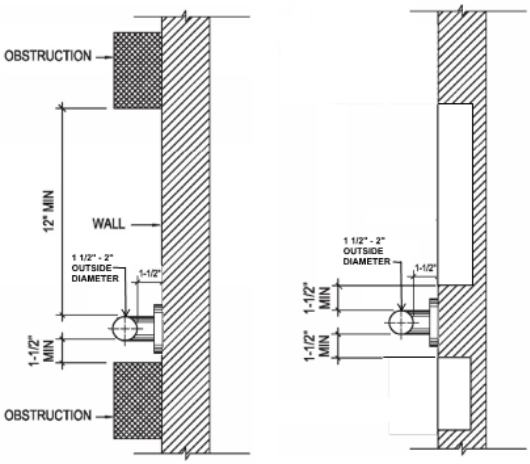

CITY OF SANTA CLARA
Inspection Division
1500 Warburton Avenue
Santa Clara, CA 95050
www.santaclaraca.gov

Division Phone: (408) 615-2440
Permit Center: (408) 615-2420
Automated Inspection System: (408) 615-2400
Fax: (408) 241-3823
Email: buildinginspection@santaclaraca.gov

GENERAL REQUIREMENTS FOR TOILET & BATHING FACILITIES

2013 CBC SECTION 11B-213 & DIVISION 6

3. *Urinals: (CBC 11B-605):*

- Clear Space: Minimum 30” x 48” for forward approach
- Fixture Extension: 13.5” min. from wall.
- Rim Height: 17” max. above floor.
- Flush Controls: hand operated or automatic
- Control Height: Max. 44” above floor

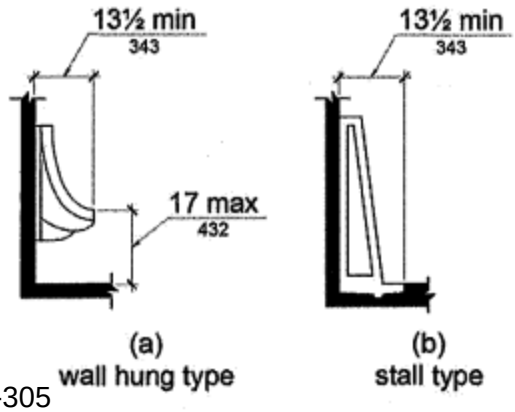

FIGURE *11B*-605.2
HEIGHT AND DEPTH OF URINALS

4. *Lavatories and Sinks (CBC 11B-606):*

- Clear Space: Min. 30” x 48” for forward approach per CBC 11B-305
- Location: 18” min. from side wall to centerline of the fixture.
- Higher of Rim Height or Counter Surface: 34” max above floor.
- Sink Depth: 6 ½” max.
- Toe Clearance: CBC 11B-306.2
- Knee Clearance: CBC 11B-306.3
- Exposed Pipes Under Sink: Insulated.
- Control: hand operated or automatic

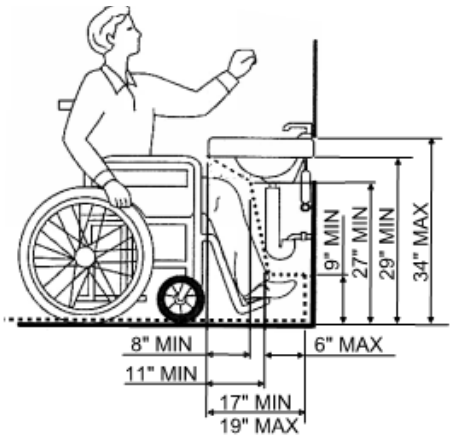

5. *Toilet Paper Dispensers (CBC 11B-604.7):*

- Height: Below grab bar, 19” min. above floor.
- Location: 7” min – 9” max in front of water closet
  Measured from centerline of dispenser
- Type: Continuous paper flow.

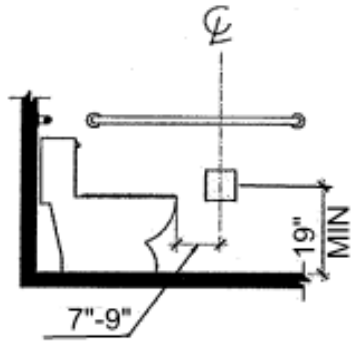

FIGURE *11B*-604.7
DISPENSER OUTLET LOCATION

6. *Mirrors (CBC 11B-603.3):*

- Located above lavatories or countertops:
  Minimum 1 with bottom edge 40” max. above floor.
- Other location: bottom edge 35” max. above floor.

7. *Lockers (CBC 11B-225.2.1):*

- 5% minimum but no fewer than one of each type shall be accessible (comply with Section 11B-811)

CITY OF SANTA CLARA
Inspection Division
1500 Warburton Avenue
Santa Clara, CA 95050
www.santaclaraca.gov

Division Phone: (408) 615-2440
Permit Center: (408) 615-2420
Automated Inspection System: (408) 615-2400
Fax: (408) 241-3823
Email: buildinginspection@santaclaraca.gov

GENERAL REQUIREMENTS FOR TOILET & BATHING FACILITIES

2013 CBC SECTION 11B-213 & DIVISION 6

❖ Single Accommodation Toilets

- ***Turning Space:*** 60" min. diameter clear circular space (CBC 11B-304.3.1) or T-shaped space per Figure 11B-304.3.2
- ***Overlap:*** Required clear floor spaces, clearance at fixtures, and turning space shall be permitted to overlap (CBC 11B-603.2.2)
- ***Door Swing:*** Door in any position may encroach into turning space by 12" max. Door shall not swing into the clear floor space or clearance required for any fixtures unless a 30"x 48" clear space is provided within the room beyond the arc of the door swing. (CBC 11B-603.2.3 Exception 2)

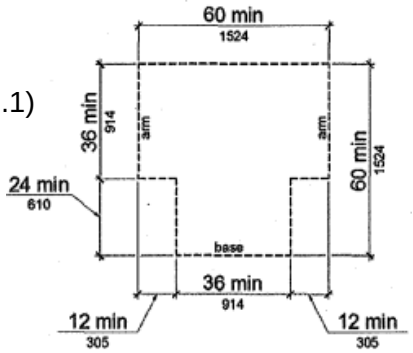

FIGURE *11B*-304.3.2
T-SHAPED TURNING SPACE

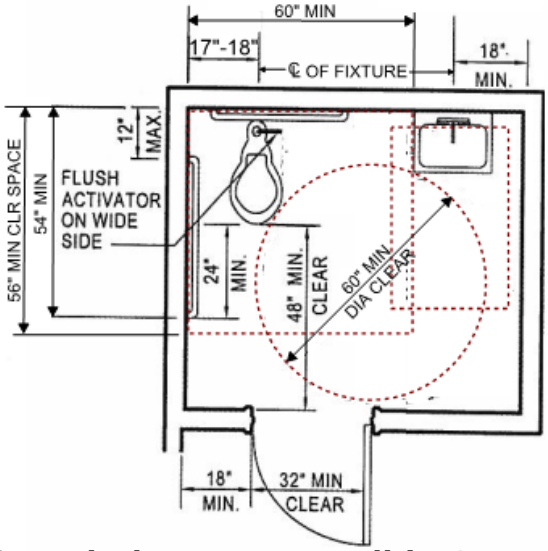

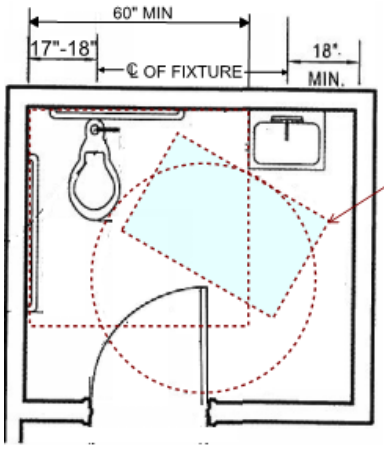

IF A 30"x48" CLEAR FLR SPACE IS PROVIDED OUTSIDE THE ARC OF THE DOOR SWING, THE DOOR CAN SWING INTO THE CLEAR FLR SPACE AND CLEARANCE REQUIRED AT THE FIXTURES

❖ Ambulatory Accessible Compartment (CBC 11B-604.8.2)

- ***When Required:*** Where a toilet compartment is provided, provide at least one ambulatory accessible compartment where the total combination of urinals and water closets is six or more. (CBC 11B-213.3.1)
- ***Size:*** depth = 60" min.; width = 35" – 37"
- ***Clearance at door:*** Shall comply with Section 11B-404, except if the approach is to the latch side of the compartment door, clearance between door side of the compartment to any obstruction shall be 44" minimum.
- ***Door:*** Self closing with door pull on both sides of the door near the latch. Compartment door can't swing into the minimum required compartment area.
- ***Side Grab Bars:*** 42" minimum long grab bar with 24" in front of water closet shall be provided on both sides of the compartment. Locate grab bars 12" max from rear wall & extend 54" from rear wall.

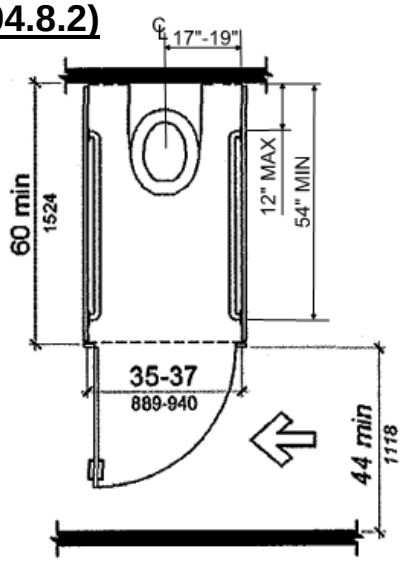

11B-604.8.2
AMBULATORY ACCESSIBLE TOILET COMPARTMENT

CITY OF SANTA CLARA
Inspection Division
1500 Warburton Avenue
Santa Clara, CA 95050
www.santaclaraca.gov

Division Phone: (408) 615-2440
Permit Center: (408) 615-2420
Automated Inspection System: (408) 615-2400
Fax: (408) 241-3823
Email: buildinginspection@santaclaraca.gov

GENERAL REQUIREMENTS FOR TOILET & BATHING FACILITIES

2013 CBC SECTION 11B-213 & DIVISION 6

❖ Wheelchair Accessible Compartments (CBC 11B-604.8.1)

- ***Size:*** Width = 60" min.; Depth = 56" min for wall hung water closet
  59" min for floor mounted water closet
- ***Maneuvering Space with Side-opening Door:*** see Figure 11B-604.8.1.1.2
  Door in side wall shall be 4" maximum from the front partition
- ***Maneuvering Space with End-opening Door:*** see Figure 11B-604.8.1.3
  Door in front partition shall be 4" maximum from the side wall or partition farthest from the water closet
- ***Door:*** Self closing with door pull on both sides of the door near the latch. Door shall not swing into the clear floor space or clearance required for any fixture. Doors may swing into that portion of maneuvering space which does not overlap the clearance required at a water closet.
- ***Side Grab Bars:*** Provide rear and side grab bars per 11B-604.5 (L-shaped grab bars are permitted)

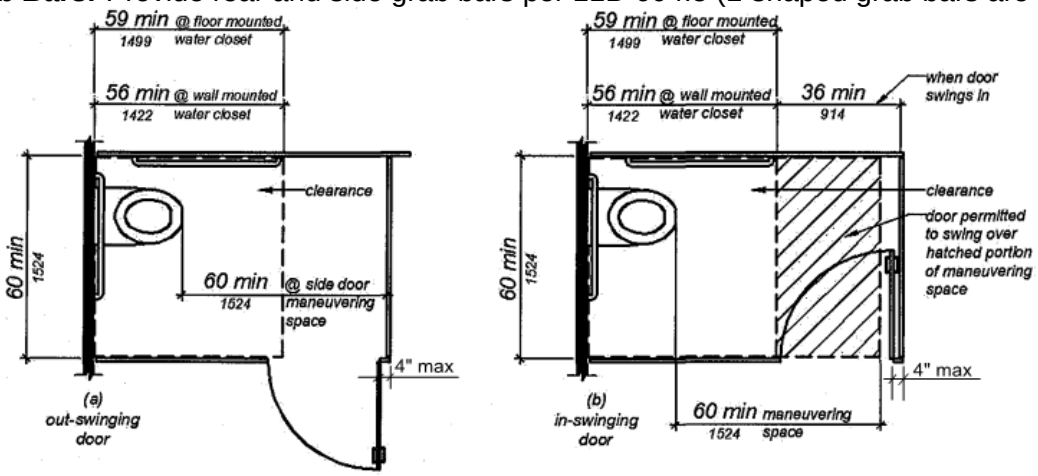

FIGURE 11B-604.8.1.1.2
MANEUVERING SPACE WITH SIDE-OPENING DOOR

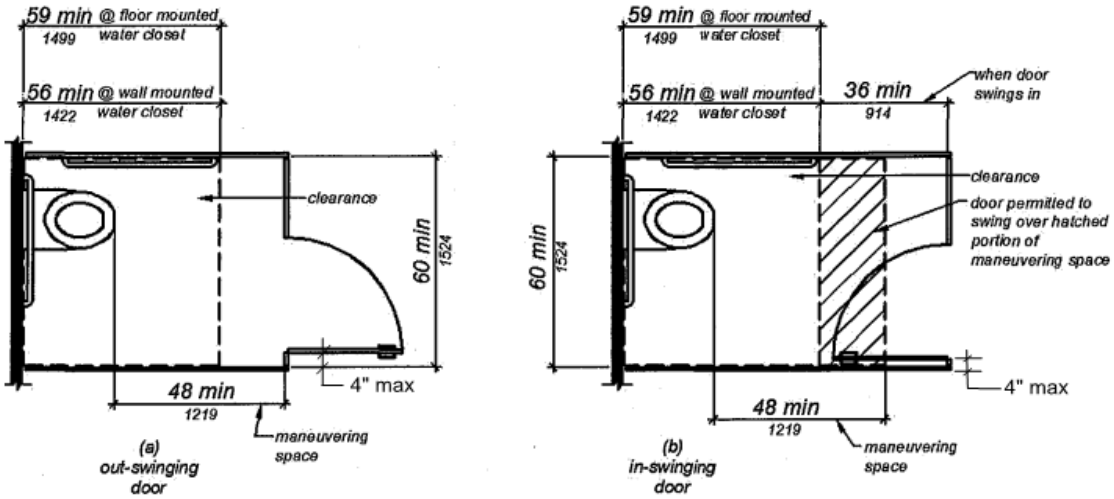

FIGURE 11B-604.8.1.1.3
MANEUVERING SPACE WITH END-OPENING DOOR

CITY OF SANTA CLARA
Inspection Division
1500 Warburton Avenue
Santa Clara, CA 95050
www.santaclaraca.gov

Division Phone: (408) 615-2440
Permit Center: (408) 615-2420
Automated Inspection System: (408) 615-2400
Fax: (408) 241-3823
Email: buildinginspection@santaclaraca.gov

GENERAL REQUIREMENTS FOR TOILET & BATHING FACILITIES

2013 CBC SECTION 11B-213 & DIVISION 6

❖ Drinking Fountains (CBC 11B-211, 11B-307 & 11B-602)

1. ***Application:*** No fewer than two drinking fountains shall be provided per floor. One drinking fountain shall be accessible (comply with Sections 11B-602.1 through 11B-602.6) and one drinking fountain shall be for a standing person (comply with Sections 11B-602.7)
2. ***Location:*** All drinking fountains shall be either be located completely within alcove, positioned completely between wing walls or otherwise positioned so as not to encroach into pedestrian walk ways.
3. ***Alcove Dimension:*** 32” minimum wide x 18” minimum deep.
   36” minimum wide where the depth exceeds 24”
4. ***Clear Floor Space:*** Minimum 30” x 48” for front approach center at a low drinking fountain
5. ***Knee and Toe Clearance:*** CBC 11B-306.2 & 11B-306.3
6. ***Depth:*** 18”-19” for wall and post mounted cantilever drinking fountain
7. ***Spout Height:*** 36” maximum above floor at low drinking fountain
   38”- 43” above floor at high drinking fountain
8. ***Spout Location:*** 15” minimum from supporting wall and 5” maximum from front edge of unit
9. ***Control:*** Manually operated system that is front mounted or side mounted and located within 6” from the front edge OR automatic electronically controlled device

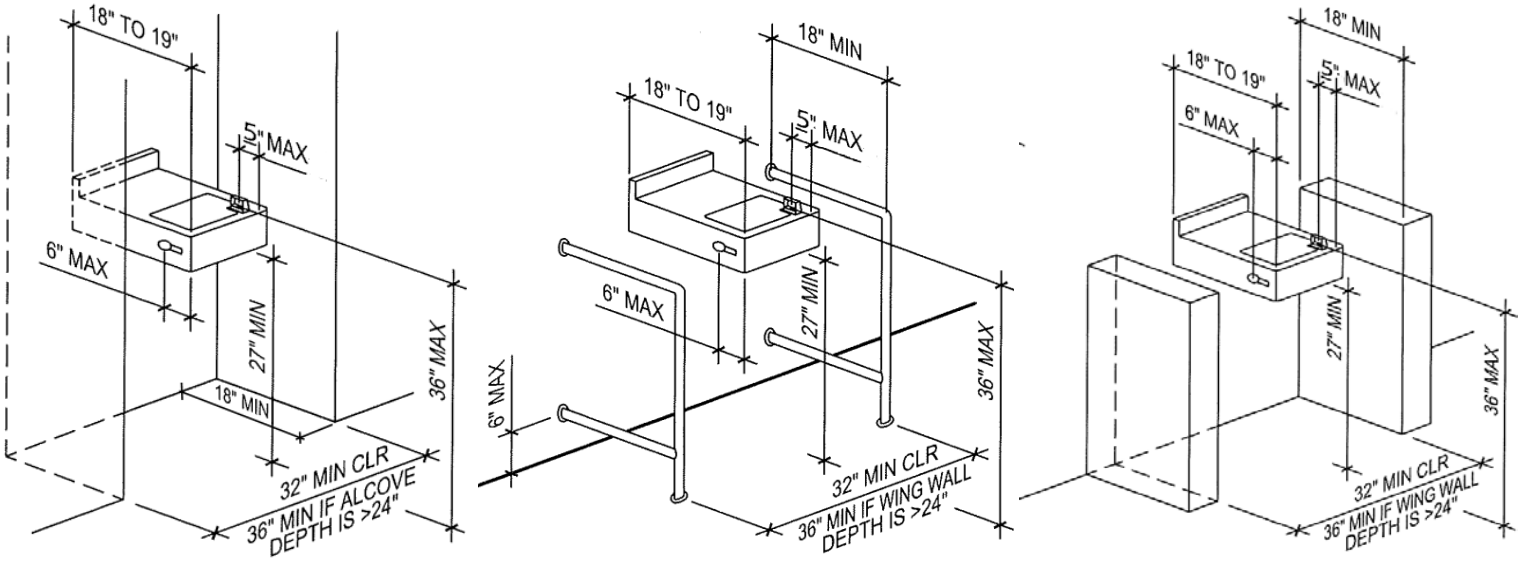

(a) ALCOVE INSTALLATION (b) NONALCOVE WING WALL INSTALLATION (c) NONALCOVE SOLID WING WALL INSTALLATION

CITY OF SANTA CLARA
Inspection Division
1500 Warburton Avenue
Santa Clara, CA 95050
www.santaclaraca.gov

Division Phone: (408) 615-2440
Permit Center: (408) 615-2420
Automated Inspection System: (408) 615-2400
Fax: (408) 241-3823
Email: buildinginspection@santaclaraca.gov

GENERAL REQUIREMENTS FOR TOILET & BATHING FACILITIES

2013 CBC SECTION 11B-213 & DIVISION 6

FIGURES – DRINKING FOUNTAIN

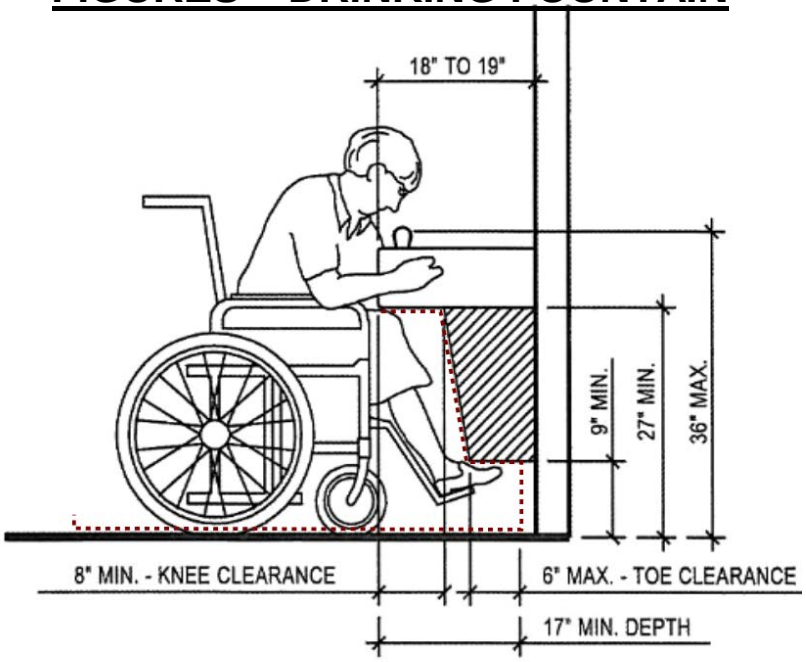

* EQUIPMENT PERMITTED IN SHADED AREA

SPOUT HEIGHT AND KNEE CLEARANCE AT DRINKING FOUNTAINS

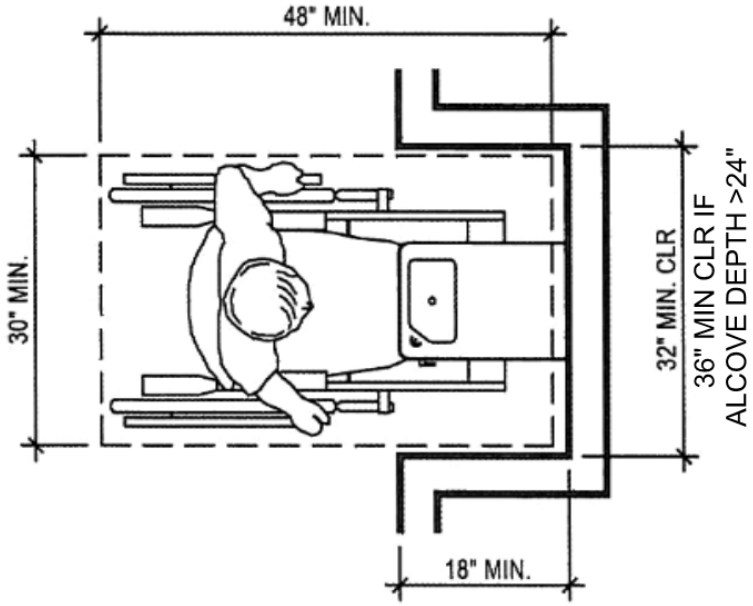

CLEAR FLOOR SPACE AT DRINKING FOUNTAINS