CITY OF SANTA CLARA
Inspection Division
1500 Warburton Avenue
Santa Clara, CA 95050
www.santaclaraca.gov

Division Phone: (408) 615-2440
Permit Center: (408) 615-2420
Automated Inspection System: (408) 615-2400
Fax: (408) 241-3823
Email: buildinginspection@santaclaraca.gov

GENERAL REQUIREMENTS FOR CURB RAMPS & ISLANDS

2013 CBC SECTION 11B-406

❖ General Requirements:

Curb ramps, blended transitions and islands on accessible routes shall comply with Section 11B-406.

a. **Locations:** Curb ramps and the flare sides of curb ramps shall not project into vehicular traffic lanes, parking spaces or parking access aisles.
b. **Width:** 48" min
c. **Surface Slope:** does not exceed 1:12 gradient (8.33%).
d. **Cross Slope:** does not exceed 1:48 gradient (2.1%)
e. **Detectable Warning:** provide truncated domes that extend 36" min. in the direction of travel for the full width of the curb ramp. (CBC 11B-705.1.2.2)

❖ Perpendicular Curb Ramps: (CBC 11B-406.2)

a. **Side of curb ramps:** slope of curb ramp flares shall not exceed 1:10 gradient (10%)
b. **Grooved border:** 12" wide along the top and at outside edges of the flare side
c. **Landings:** provide at top of curb ramp. Length shall be 48" minimum and the width shall be at least as wide as the curb ramp

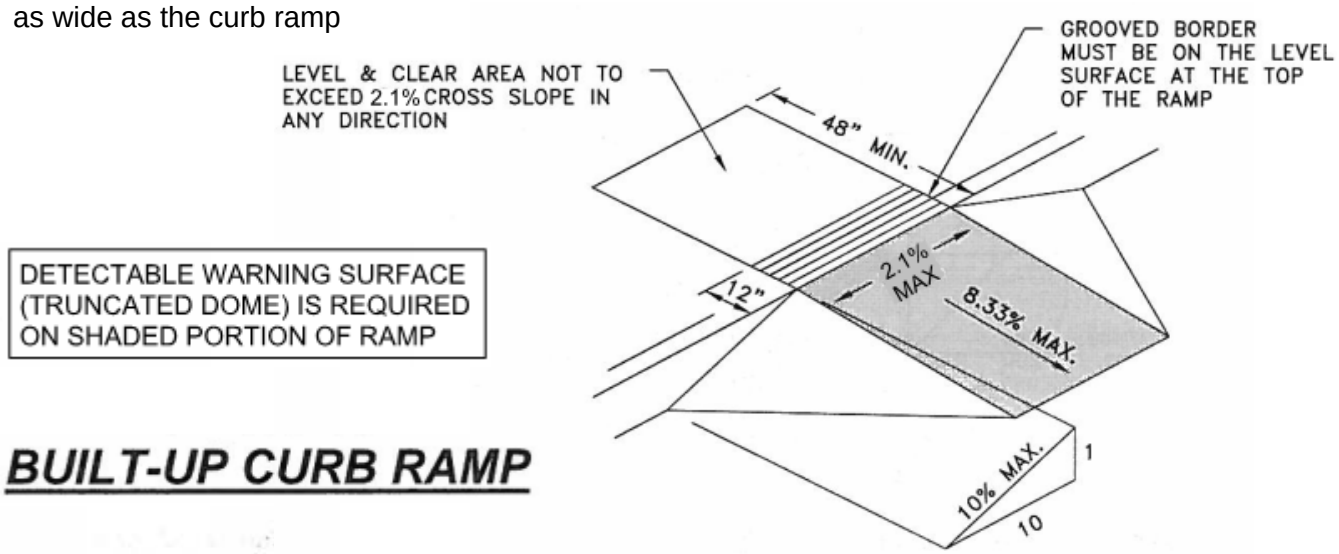

BUILT-UP CURB RAMP

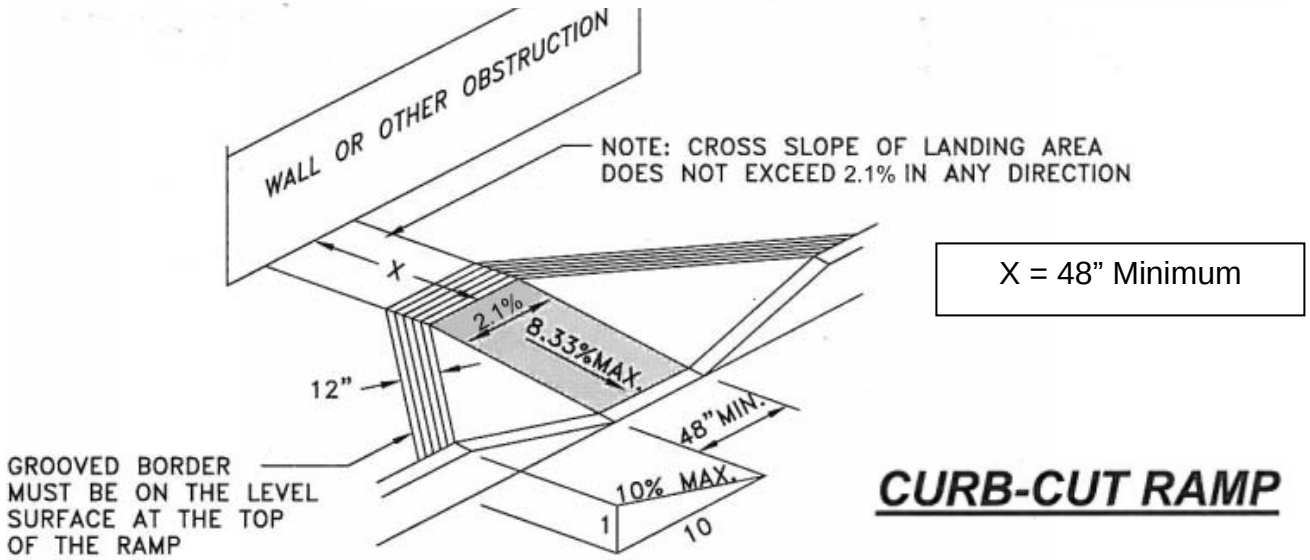

X = 48" Minimum

CURB-CUT RAMP

CITY OF SANTA CLARA
Inspection Division
1500 Warburton Avenue
Santa Clara, CA 95050
www.santaclaraca.gov

Division Phone: (408) 615-2440
Permit Center: (408) 615-2420
Automated Inspection System: (408) 615-2400
Fax: (408) 241-3823
Email: buildinginspection@santaclaraca.gov

GENERAL REQUIREMENTS FOR CURB RAMPS & ISLANDS

2013 CBC SECTION 11B-406

❖ Parallel Curb Ramps: (CBC 11B-406.3)

a. **Turning space:** 48" x 48" minimum level space shall be provided at the bottom of the curb ramp
b. **Grooved border:** 12" wide along the level surface at the top of the ramp

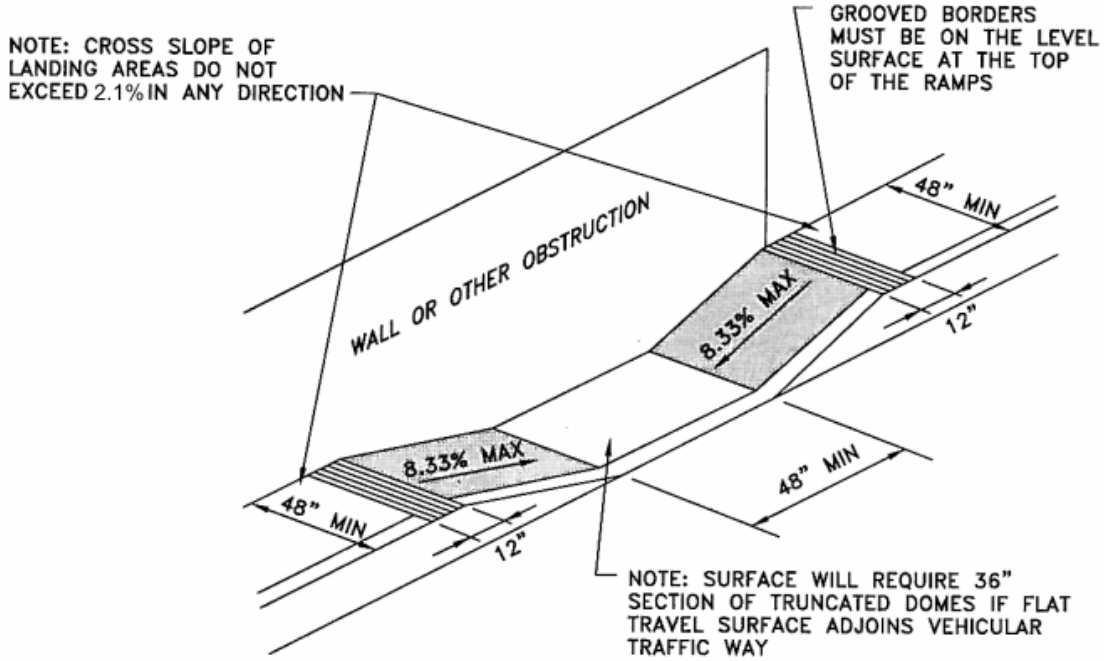

❖ Diagonal curb ramps: (CBC 11B-406.5.9 & 11B-406.5.10)

a. **Clear space:** The bottom of diagonal curb ramps shall have a clear space 48" minimum outside the active lane of the roadway. Diagonal curb ramps at marked crossings shall provide 48" minimum clear space within the markings.
b. **Flare side:** Diagonal curb ramps with flare sides shall have a segment of curb 24" long minimum located on each side of the curb ramp and within marked crossings.

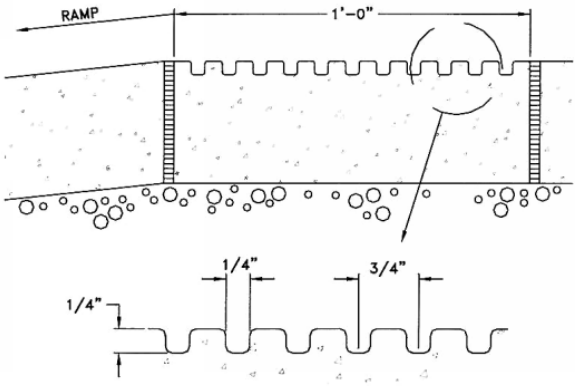

GROOVED BORDER DETAIL

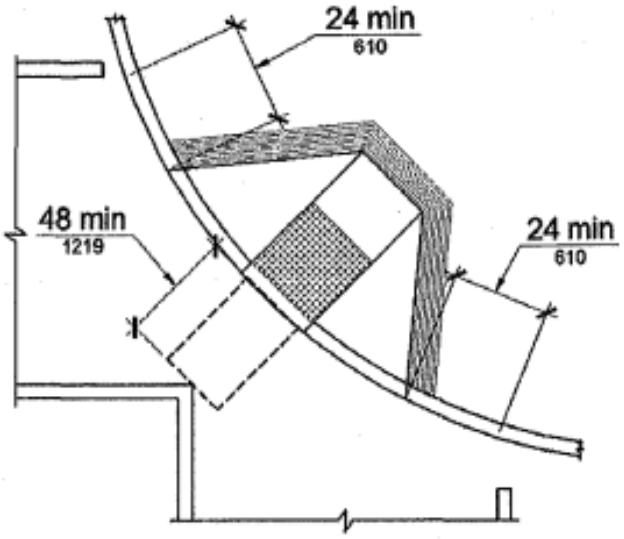

FIGURE *11B*-406.5.10
DIAGONAL OR CORNER TYPE CURB RAMPS

CITY OF SANTA CLARA
Inspection Division
1500 Warburton Avenue
Santa Clara, CA 95050
www.santaclaraca.gov

Division Phone: (408) 615-2440
Permit Center: (408) 615-2420
Automated Inspection System: (408) 615-2400
Fax: (408) 241-3823
Email: buildinginspection@santaclaraca.gov

GENERAL REQUIREMENTS FOR CURB RAMPS & ISLANDS

2013 CBC SECTION 11B-406

❖ **Islands:** (CBC 11B-406.6)

Raised islands in crossings shall be cut through level with the street if it has curb ramps at both sides.

Width: 60" minimum clear width of the accessible route at islands.
Curb ramps: Where curb ramps are provided, they shall comply with Section 11B-406.
Detectable warning: Island shall have detectable warnings complying with Section 11B-705.

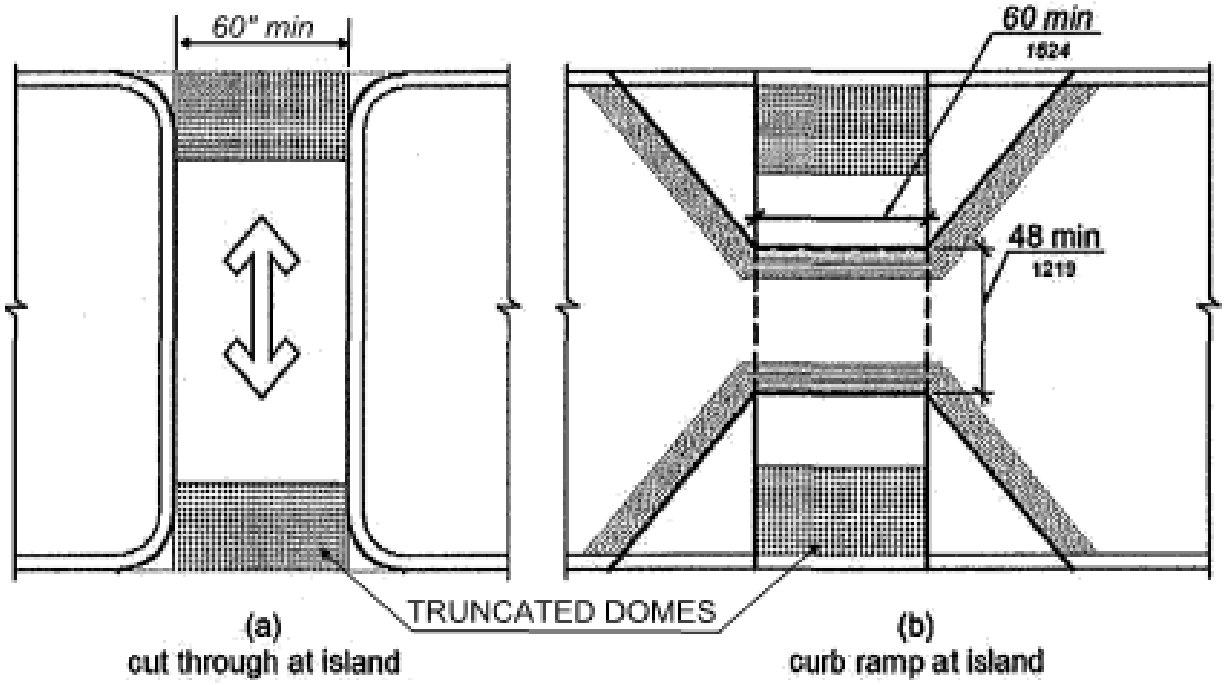

FIGURE *11B*-406.6
ISLANDS IN CROSSINGS

CITY OF SANTA CLARA
Inspection Division
1500 Warburton Avenue
Santa Clara, CA 95050
www.santaclaraca.gov

Division Phone: (408) 615-2440
Permit Center: (408) 615-2420
Automated Inspection System: (408) 615-2400
Fax: (408) 241-3823
Email: buildinginspection@santaclaraca.gov

GENERAL REQUIREMENTS FOR CURB RAMPS & ISLANDS

2013 CBC SECTION 11B-406

❖ **Detectable Warnings:** (CBC 11B-247.1 & 11B-705)
Detectable warnings shall consist of a surface of truncated domes.

Dome size and spacing: See Figure 11B-705.1
Contrast: A detectable warning surface shall contrast visually with the adjacent walking surface.
Color: Yellow conforming to FS 33538 of Federal Standard 595C
Exception: Detectable warning at curb ramps, islands or cut-through medians shall not be required to be yellow
Size: Provide truncated domes to extend 36" minimum in the direction of travel for the full width of the curb ramp or cut through median.
Location: 6"-8" from outside face of curb at curb ramp.

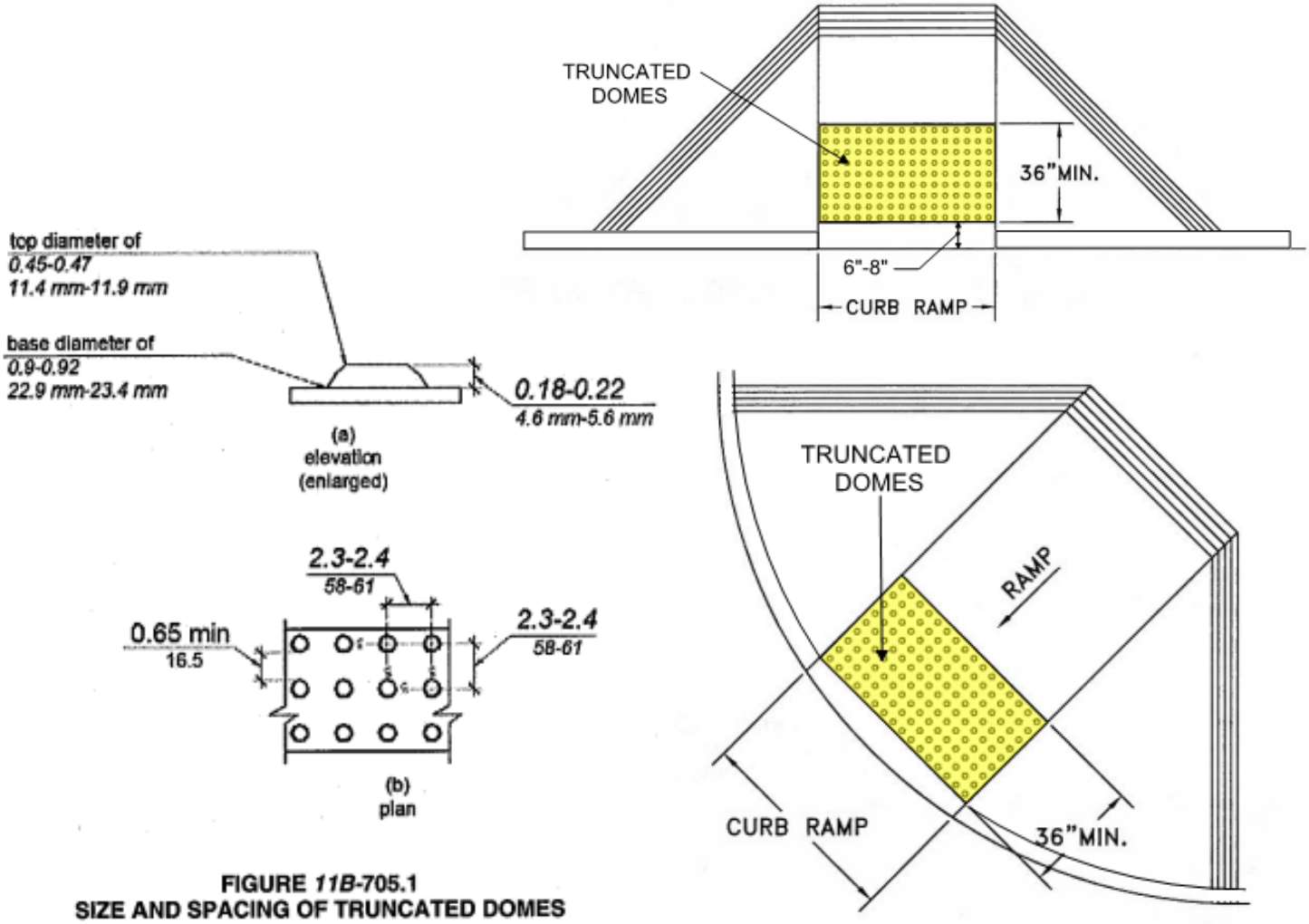

FIGURE 11B-705.1
SIZE AND SPACING OF TRUNCATED DOMES